DRAWING NOTES:

1. MANUFACTURER TO PROVIDE DRAWINGS FOR APPROVAL FOR ALL EQUIPMENT PRIOR TO MANUFACTURE.
2. ANTI CUT V-NOTCHES TO BE INSTALLED FROM BOTTOM OF POLE TO 3M ABOVE FINISHED GROUND LEVEL TO PREVENT CUTTING OF POLE.
3. ANTI VANDAL STEEL PLATES TO BE INSTALLED FROM BOTTOM OF POLE TO 3M ABOVE FINISHED GROUND LEVEL TO PREVENT DROPPING OF POLE.
4. THIS DESIGN IS SUITABLE FOR CABLE SIZES UP TO 25mm^2. A LARGER DIAMETER POLE AND CONDUIT MAY BE USED.

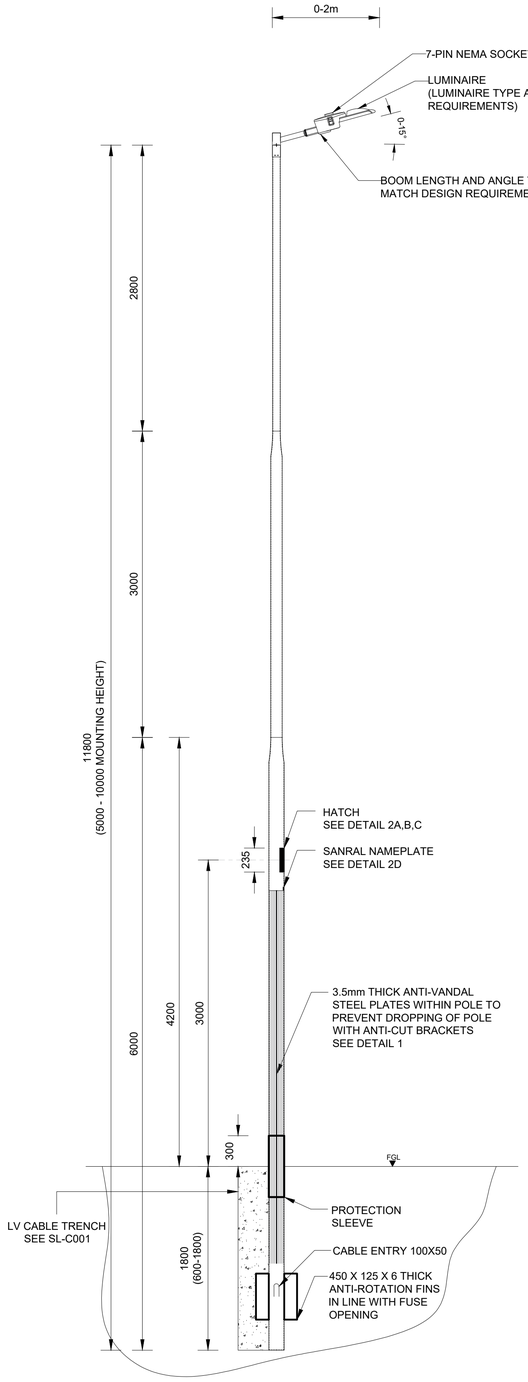

TYPICAL SECTION OF BURIED POLE
(1:30)

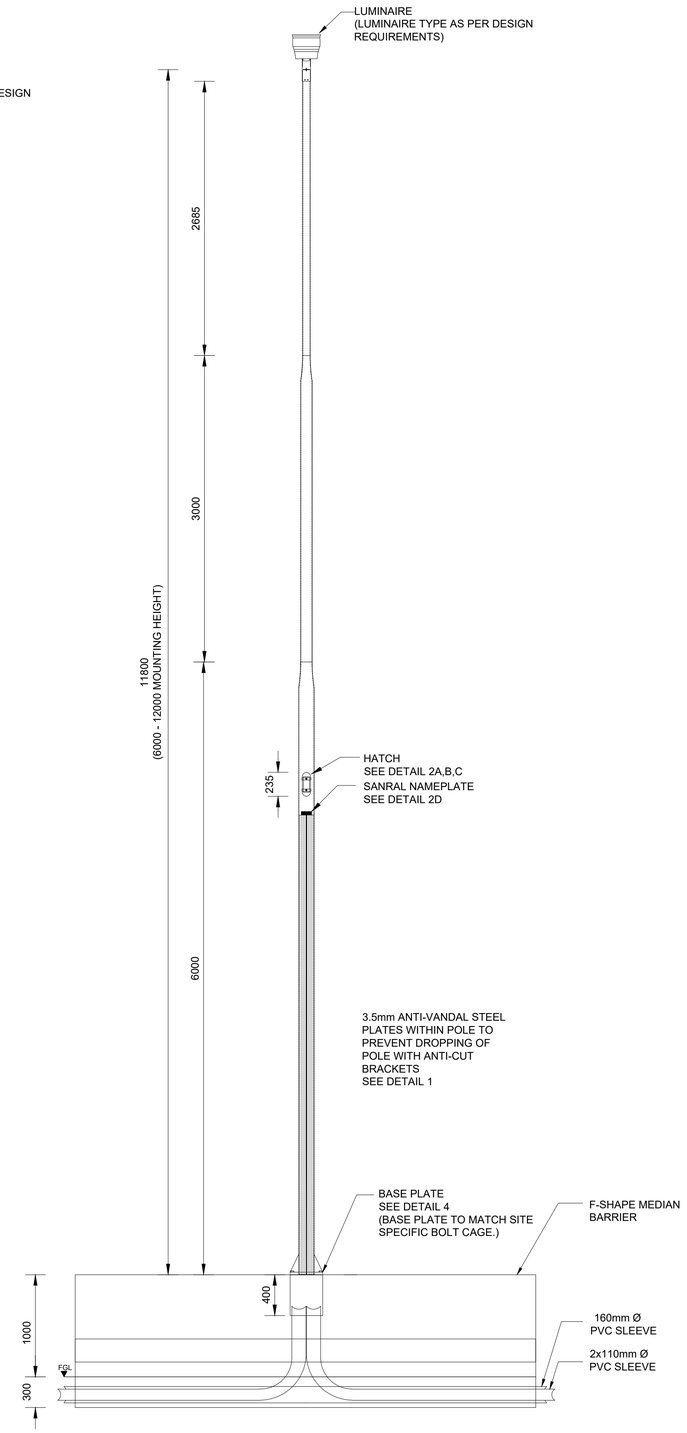

TYPICAL SECTION OF POLE ON PARAPET
(1:30)

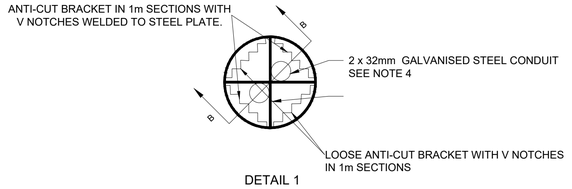

DETAIL 1
(1:5)

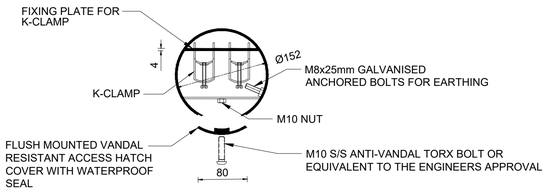

DETAIL 2B
VIEW A-A
(1:5)

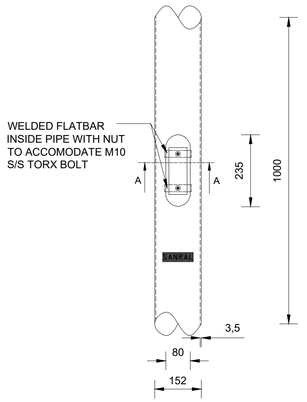

DETAIL 2A
FRONT VIEW SHOWING
ACCESS HATCH CUT OUT
(1:10)

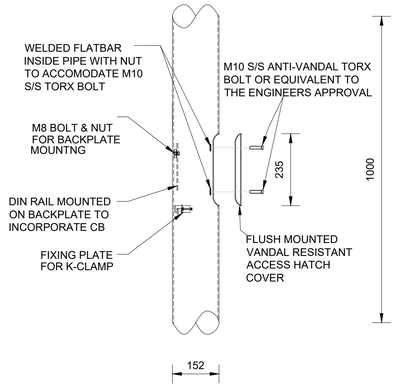

DETAIL 2C
SIDE VIEW SHOWING
TYPICAL ACCESS HATCH
ASSEMBLY
(1:10)

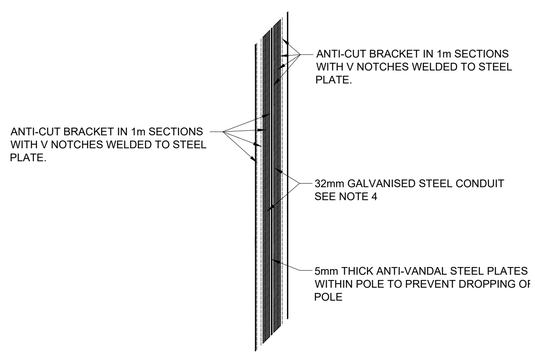

DETAIL 3
VIEW B-B
(1:10)

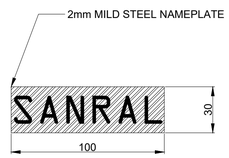

DETAIL 2D
SANRAL NAMEPLATE
(1:2)

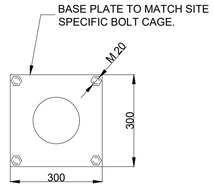

DETAIL 4
BASEPLATE
(1:10)

No.	DATE	REVISION	APPROVED
V1	10-07-2020	ORIGINAL VERSION	D.N.

SANRAL TYPICAL DRAWINGS

COPYRIGHT: THIS DRAWING IS PROTECTED IN TERMS OF THE COPYRIGHT ACT No. 98 OF 1978 AND MAY NOT BE REPRODUCED WITHOUT THE PERMISSION IN WRITING FROM SANRAL. CONDITIONS FOR USE: CONSULTANTS APPOINTED BY SANRAL SHALL INCORPORATE THE TYPICAL DETAILS HEREON INTO THEIR SPECIFIC DESIGN FOR WHICH THEY WILL ASSUME FULL PROFESSIONAL RESPONSIBILITY. THIS TYPICAL DRWING MAY NOT BE USED FOR TENDER PURPOSES.

SANRAL
SOUTH AFRICAN NATIONAL ROADS AGENCY SOC LTD
BUILDING SOUTH AFRICA THROUGH BETTER ROADS

HEAD OFFICE
48 Tambotie Avenue
Val de Grace
Pretoria
0184

PO Box 415
Pretoria 0001
South Africa
Tel: (012) 844 8000

EASTERN REGION
55 van Eck Place
Pietermaritzburg
3201

PO Box 100410
Scottsville
3209
Tel: (033) 392 8100

APPROVED

Date:

TYPICAL DRAWINGS - ELECTRICAL

ANTI-VANDAL POLE (6-12m)
PLAN, ELEVATION & DETAILS

SANRAL DOC No. (PDF): -
SANRAL DOC No. (DWG): -
SANRAL DRAWING No.: TD-E-P-2000-1-V1

TD-E-P-2000-1-V1